BWE
BURMEISTER & WAIN ENERGY
Berkes Group
YOUNG SINCE 1843

BWE AROUND THE WORLD

TIMELINE

- **1843** – Hans Baumgarten establishes workshop in Copenhagen
- **1865** – Partnering with Mr. Burmeister and Mr. Wain. Burmeister & Wain (B&W) Machine & Shipbuilder is established
- **1898** – Rudolf Diesel grants B&W an exclusive license to manufacture the diesel engine. B&W builds world's second test diesel engine
- **1904** – B&W goes to market with commercial B&W diesel engines
- **1912** – B&W builds the world's first ocean going diesel engine ship M/S Selandia
- **1955** – B&W Steam acquires Benson Once Through license
- **1980** – B&W Engine acquired by MAN renamed MAN B&W Diesel. B&W Steam division acquired by Lenjtes Germany renamed B&W Energy (BWE)
- **1986** – BWE develops the Straw Fired Boiler technology
- **1989** – BWE builds world's first of many Straw Fired Boilers in Denmark
- **1997** – 1997-2000 - BWE builds USC boilers each 415 MWe
- **2000** – 2000-2002 - BWE builds Straw Fired Boilers in Spain & England
- **2003** – BWE builds world's first Coal to Wood Pellet Fuel Conversion
- **2013** – 2013-2018 - BWE builds straw and Wood Chip Fired Boilers in Germany, England & Denmark
- **2019** – 2019-2022 - BWE contracts 11 Rice Straw Boilers in India
- **2023** – BWE builds first turn-key biomass power plant in Columbia
- **2024** – BWE contracts first Straw Fired Boiler in Germany in 10 years

OFFICES

- Copenhagen, Denmark
- Madrid, Spain
- Montevideo, Uruguay
- New Delhi, India

BWE
BURMEISTER & WAIN ENERGY
Berkes Group

NEARLY **TWO CENTURIES** DELIVERING **ENERGY** SOLUTIONS

From the early establishment in Copenhagen in 1843, Burmeister & Wain Energy reached 180 years of age in 2023 with an unbroken line of activity within steam generator design and is today the oldest steam generator manufacturer in the world.

The production of the first steam generators took place in 1852, after which steam generators became the technical and industrial identity of Burmeister & Wain Energy. The development of the steam generator to its present level and specialization has been an unprecedented accomplishment both historically and technologically as well as commercially. The technical specialization is today the most important factor for the company's continued presence in a transforming market.

The early Danish market transformation to renewable natural resources for energy production kick started Burmeister & Wain Energy to an early specialization in market development of combustion and steam generation technology. This development responds well to the World's demand of today, placing Burmeister & Wain Energy in a technologically unique position.

BWE
BURMEISTER & WAIN ENERGY
Berkes Group

WHO
WE ARE

One of the greatest assets of BWE is its people and its multi disciplinary organization. After more than180 years of fossil fuel combustion the focus today is on biomass fired boilers for combined heat and power production, able to burn a wide range of biomass fuels. To remain its position as the leading boiler manufacturer, BWE always develops high quality and innovative solutions forming the very definition of Best Available Technology. Innovation is the DNA of BWE giving us a head start in the race towards the best and most influential solutions in the future energy matrix and environmental challenges.

BWE will continuously develop boiler concepts that respect the most stringent standards and regulations as well as concepts that foresee the needs of the future.

In order to attract the most qualified employees, BWE will always offer a good working enviroment with focus on professional and personal development through challenging work tasks. The employees represent the main asset of BWE ,and the success of the company depends entirely on their performance.

BWE
BURMEISTER & WAIN ENERGY
Berkes Group

PROJECTS

BWE
BURMEISTER & WAIN ENERGY
Berkes Group

PROJECTS

Lille
France

Supply: Boiler Island
Steam: 14 tph, 16 bara, 210 °C
Input: 11 MWt
Output: 0 MWe + 10 MWt
Fuel: 100% Spent Grain
Cyclonic Combustion Chamber
COD: 2026 ex

Logrosan
Spain

Supply: Boiler Island
Steam: 143 tph, 140 bara, 543 °C, 543 °C
Input: 123 MWt
Output: 50 MWe & 0 MWt
Fuel: 100% Wood Chips & 10% Olive Cake
Water Cooled Vibration Grate
COD: 2026 ex

Lachendorf
Germany

Supply: Boiler Island
Steam: 72 tph, 112 bara, 543 °C
Input: 54 MWt
Output: 12 MWe & 38 MWt
Fuel: 100% Straw & 60% Waste Wood
Water Cooled Vibration Grate
COD: 2027 ex

Villanueva
Colombia

Supply: Power Plant
Steam: 110 tph, 66 bara, 485 °C
Input: 94 MWt
Output: 25 MWe & 0 MWt
Fuel: 100% Wood Chips
Water Cooled Vibration Grate
COD: 2025

Cerro Largo
Uruguay

Supply: Boiler Island
Steam: 55 tph, 20 bara, 220 °C
Input: 37 MWt
Output: 0 MWe & 33 MWt
Fuel: 100% Wood Chips
Water Cooled Vibration Grate
COD: 2026 ex

Lleida
Spain

Supply: Boiler Island
Steam: 50 tph, 44 bara, 355 °C
Input: 40 MWt
Output: 2 MWe & 34 MWt
Fuel: 100% Wood Chips
Water Cooled Vibration Grate
COD: 2024

Sinnamary
French Guiana

Supply: Boiler Island
Steam: 45 tph, 80 bara, 525 °C
Input: 40 MWt
Output: 11 MWe & 0 MWt
Fuel: 100% Wood Chips
Water Cooled Vibration Grate
COD: 2025 ex

Slobozia
Romania

Supply: Boiler Island
Steam: 35 tph, 55 bara, 455 °C
Input: 31 MWt
Output: 5 MWe & 23 MWt
Fuel: 100% Sunflower Husk
Cyclonic Combustion Chamber
COD: 2023

Chattergarh
India

Supply: Boiler Island
Steam: 74 tph, 96 bara, 540 °C
Input: 59 MWt
Output: 15 MWe & 0 MWt
Fuel: 100% Mustard Husk
Water Cooled Vibration Grate
COD: 2025 ex

Kurukshetra-
Haryama, India

Supply: Boiler Island
Steam: 75 tph, 96 bara, 540 °C
Input: 56 MWt
Output: 15 MWe & 0 MWt
Fuel: 100% Rice Straw
Water Cooled Vibration Grate
COD: 2022

Jalkheri-Punjab
India

Supply: Boiler Island
Steam: 50 tph, 68 bara, 490 °C
Input: 41 MWt
Output: 12 MWe & 0 MWt
Fuel: 100% Rice Straw
Water Cooled Vibration Grate
COD: 2023

Gent
Belgium

Supply: Boiler Island
Steam: 100 tph, 105 bara, 470 °C
Input: 76 MWt
Output: 20 MWe & 48 MWt
Fuel: 100% Waste Wood
Water Cooled Vibration Grate
COD: 2022

PROJECTS

Puerto Carreño
Colombia

Supply: Power Plant
Steam: 24 tph, 69 bara, 485 °C
Input: 20 MWt
Output: 6 MWe & 0 MWt
Fuel: 100% Wood Chips
Travelling Grate
COD: 2021

Kent
England

Supply: Boiler Island
Steam: 90 tph, 140 bara, 540 °C, 540 °C
Input: 78 MWt
Output: 28 MWe & 0 MWt
Fuel: 100% Wood Chips
Water Cooled Vibration Grate
COD: 2018

Santa Rosa
Argentina

Supply: Boiler Island
Steam: 76 tph, 69 bara, 490 °C
Input: 58 MWt
Output: 18 MWe & 0 MWt
Fuel: 100% Wood Chips
Water Cooled Vibration Grate
COD: 2019

Cacao,
French Guiana

Supply: Boiler Island
Steam: 23 tph, 69 bara, 485 °C
Input: 20 MWt
Output: 6 MWe & 0 MWt
Fuel: 100% Wood Chips
Travelling Grate
COD: 2018

San josé
Uruguay

Supply: Boiler Island
Steam: 2 x 40 tph, 43 bara, 450 °C
Input: 2 x 37 MWt
Output: 15 MWe & 0 MWt
Fuel: 100% Wood Chips
Travelling Grate
COD: 2019

Snetterton
England

Supply: Boiler Island
Steam: 173 tph, 112 bara, 543 °C
Input: 130 MWt
Output: 42 MWe & 0 MWt
Fuel: 100% Straw & 50% Wood Chips
Water Cooled Vibration Grate
COD: 2017

Lisbjerg
Denmark

Supply: Boiler Island
Steam: 152 tph, 112 bara, 543 °C
Input: 110 MWt
Output: 35 MWe & 78 MWt
Fuel: 100% Straw & 50% Wood Chips
Water Cooled Vibration Grate
COD: 2017

Sète
France

Supply: Boiler Island
Steam: 40 tph, 36 bara, 295 °C
Input: 33 MWt
Output: 2 MWe & 28 MWt
Fuel: 100% Sunflower Husk
Cyclonic Combustion Chamber
COD: 2014

Brigg
England

Supply: Boiler Island
Steam: 152 tph, 112 bara, 543 °C
Input: 117 MWt
Output: 38 MWe & 0 MWt
Fuel: 100% Straw & 20% Wood Chips
Water Cooled Vibration Grate
COD: 2016

Emlichheim
Germany

Supply: Boiler Island
Steam: 67 tph, 112 bara, 522 °C
Input: 50 MWt
Output: 16 MWe & 29 MWt
Fuel: 100% Straw
Water Cooled Vibration Grate
COD: 2013

Sealford
England

Supply: Boiler Island
Steam: 152 tph, 112 bara, 543 °C
Input: 115 MWt
Output: 38 MWe & 2 MWt
Fuel: 100% Straw & 20% Wood Chips
Water Cooled Vibration Grate
COD: 2014

Avedore
Denmark

Supply: Boiler Island
Steam: 1067 tph, 305 bara, 582 °C, 600 °C
Input: 860 MWt
Output: 415 MWe & 402 MWt
Fuel: 100% Wood Pellets
Multi Fuel Burner
COD: 2000

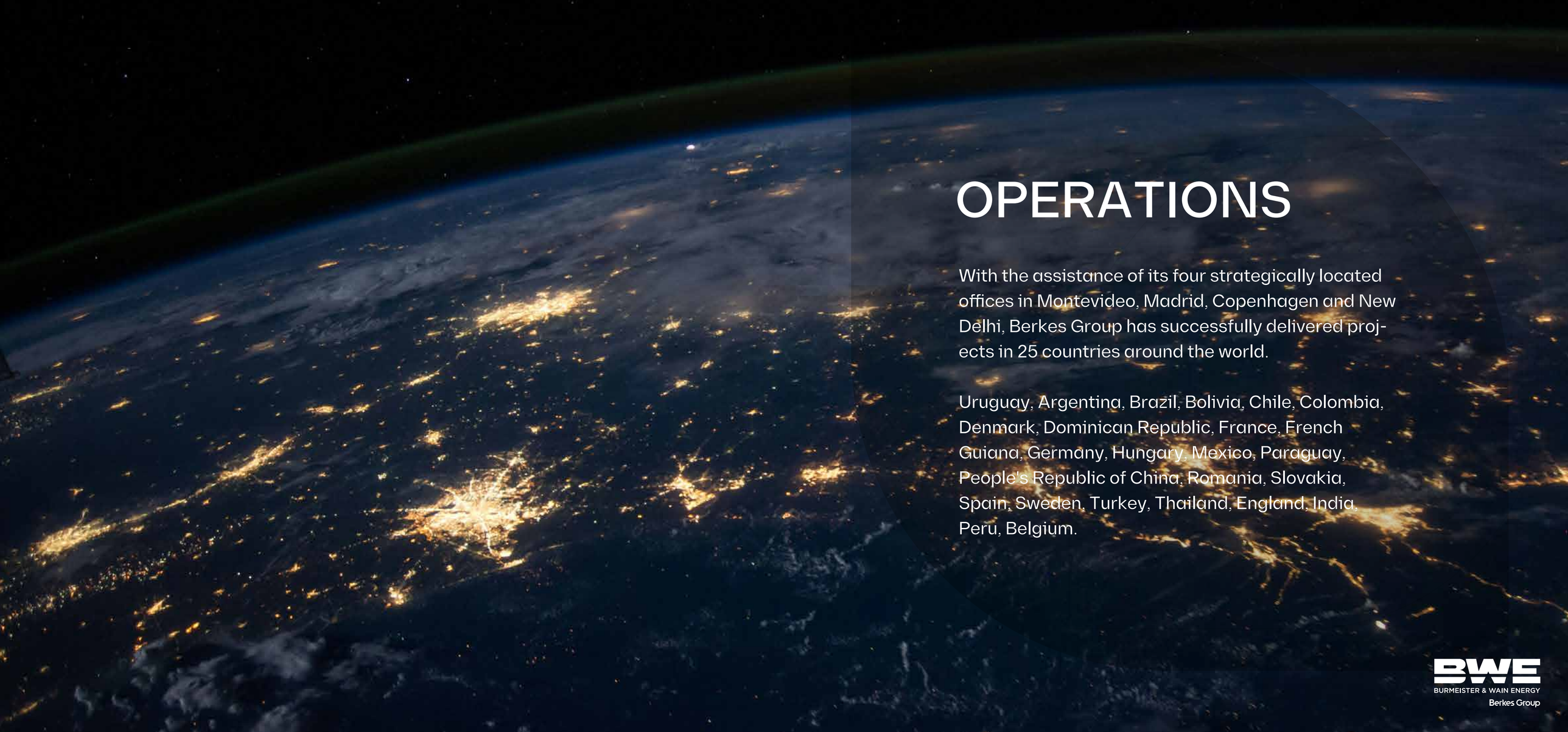

OPERATIONS

With the assistance of its four strategically located offices in Montevideo, Madrid, Copenhagen and New Delhi, Berkes Group has successfully delivered projects in 25 countries around the world.

Uruguay, Argentina, Brazil, Bolivia, Chile, Colombia, Denmark, Dominican Republic, France, French Guiana, Germany, Hungary, Mexico, Paraguay, People's Republic of China, Romania, Slovakia, Spain, Sweden, Turkey, Thailand, England, India, Peru, Belgium.

BWE
BURMEISTER & WAIN ENERGY
Berkes Group

TECHNOLOGIES

BWE
BURMEISTER & WAIN ENERGY
Berkes Group

MASTERING **COMPLEX BIOMASS**

Rice Straw

Cereal Straw

Corn Stover

Cotton Stalkes

Palm Leave

Nut Shells

Sunflower Husk

Rice Husk

Olive Cake

Bagasse

Wood Chips

Wood Pellets

BWE
BURMEISTER & WAIN ENERGY
Berkes Group

TECHNOLOGY
COMBUSTION SYSTEM

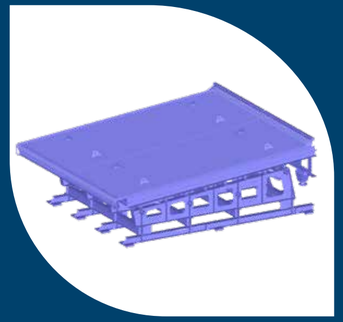

Water Cooled Vibration Grate

The Water Cooled Vibration Gate (WCVG) is a BWE in-house design, which is offered in sizes from 30 to 150 MWt. The design can be tailored to customer requirements and optimized for specific fuels like Wheat Straw, Rice Straw, Corn Stover, Mustard Husk, Palm Leaves, Sugarcane Top Trash, Wood Chips and more. Specific fuel feeding systems are adapted depending on the type of fuel being applied. The WCVG is an integrated part of the evaporator. Primary Air is introduced underneath the grate and takes up 30 % of the combustion air. The remaining 70 % is introduced as Ignition Air, Secondary Air and Overfire Air staging the combustion for superior NOx formation control. The WCVG offers high availability and low maintenance costs.

Multi Fuel Burner

The Multi Fuel Burner (MFB) is a BWE in-house design, which is offered in sizes from 15 MWt to 100 MWt. The design can be tailored to customer requirements including fuel flexibility, air staging and adjustable swirl. The Multi Fuel Burner can be designed for Natural Gas, Heavy Fuel Oil, Light Fuel Oil, Coal Dust or Wood Dust. All fuels can be applied in a single unit and with automated transition. Fuels are controlled individually to obtain optimum flame shape, stability and temperature as well as Ultra Low NOx and CO formation. Air staging is important and involves the stratification of Primary, Secondary and Tertiary Air, Over Burner Air (OBA) and Over Fire Air (OFA). This applies to all boilers, burner arrangements and combustion air designs.

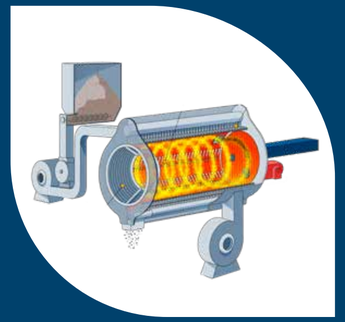

Cyclonic Combustion Chamber

The Cyclonic Combustion Chamber (CCC) is a BWE in-house design, which is offered in sizes from 10 to 40 MWt. The design can be tailored to customer requirements and optimized for specific fine dust fuels like Saw Dust, Sunflower Husk, Meat and Bone Meal. The horizontally oriented Water Cooled Cyclonic Combustion Chamber is an integral part of the evaporator. Fuel is carried to the combustion chamber pneumatically and enters tangentially. Air nozzles enforces the cyclonic movement inside the combustion chamber enhancing residences time, turbulence, temperature distribution and combustion efficiency. The CCC offers high availability and low maintenance costs.

Step-Grate

The Step-Grate system is a robust and proven solution for the thermal conversion of challenging solid fuels, including refuse-derived fuel (RDF), solid recovered fuel (SRF), municipal solid waste (MSW), waste wood (A1/A2/A3), and other mixed waste fuels. The technology is designed to ensure stable combustion, high availability, and excellent fuel flexibility, and is available in thermal capacities ranging from 20 to 60 MWt.
The grate consists of a series of stepped, moving rows made of durable cast elements that gradually convey the fuel through distinct combustion zones. Depending on fuel characteristics and plant requirements, the system can be configured with either air-cooled or water-cooled grates, ensuring reliable operation and long service life under demanding conditions.

BWE
BURMEISTER & WAIN ENERGY
Berkes Group

TECHNOLOGY
FUEL FEEDING SYSTEM

Double Screw Stoker

The Double Screw Stoker is a BWE in-house design. It is a fuel feeding system designed for low density fibrous fuels like Wheat Straw, Rice Straw, Corn Stover, Mustard Husk, Palm Leaves, Sugarcane Top Trash and more, As loosened fuel leaves the bales opener, it drops down into the Double Screw Stoker, which consists of two parallel and opposite rotating conical and progressive screws. The Double Screw Stoker ensures that fuel and twines are recompressed forming an air tight plug, and that it is pushed slowly onto the grate. The fuel can be mixed with 50 % Wood Chips and still form an air tight plug.

Single Screw Stoker

The Single Screw Stoker is a BWE in-house design. It is a fuel feeding system for high density particulate fuels like Wood Chip and Wood Pellets.

Spreader Stoker

The Spreader Stoker is a BWE in-house design. It is a fuel feeding system designed for high density particular fuels like Wood Chips, Wood Briquettes and Wood Pellets. Fuel is continuously propelled into the furnace and onto the grate by an air jet pneumatically accelerating the fuel. A pulsing air jet mechanism in the spreader ensures distribution of the fuel. From the landing area in the upper grate end, the grate vibration will even out the fuel layer to cover the upper cross section of the grate. Fuel quality can be selected in a wide range of heating values.

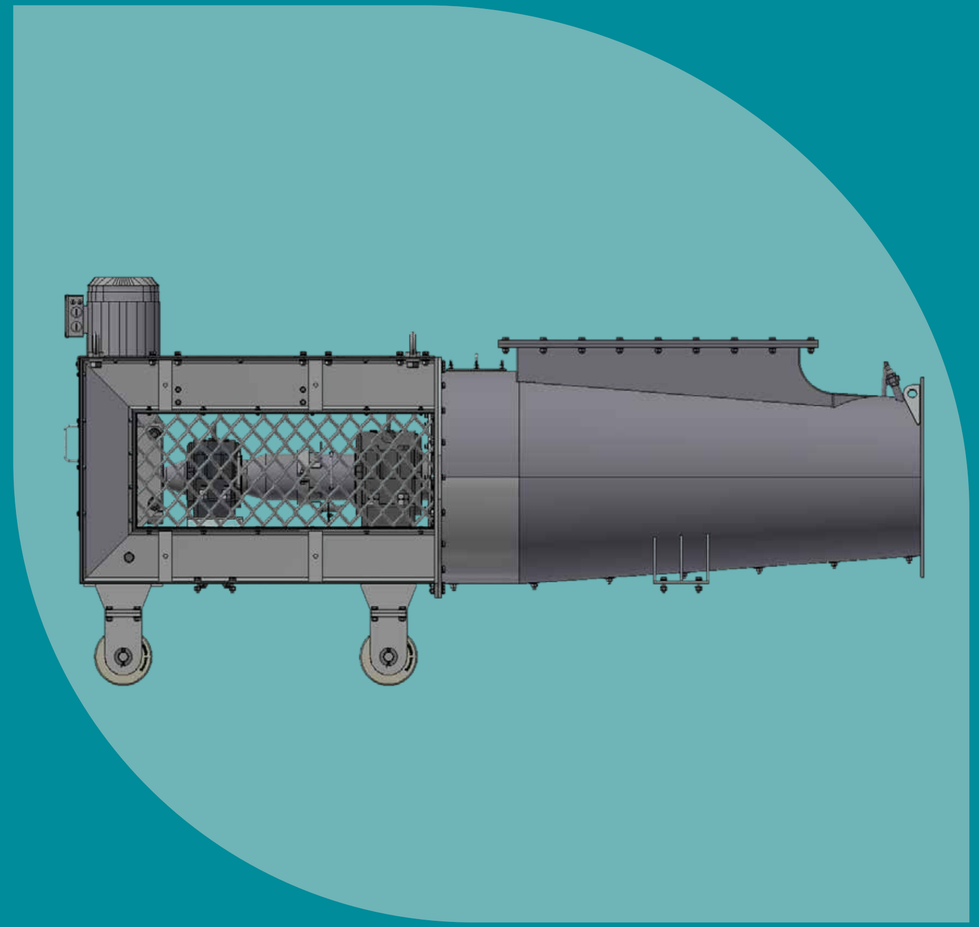

BWE
BURMEISTER & WAIN ENERGY
Berkes Group

TECHNOLOGY
BALE HANDLING SYSTEM

Warehouse Management System

BWE offers a complete automated fuel handling system for baled fuel from reception in the warehouse to feeding the boiler. Warehouse Management is key and consists of a Supplier & Supply Identification Station (SSID), a SQL Database and a Warehouse Management Software. The SSID registers the supplier and stores in the SQL Database. The roof crane lifts the supply of 12 bales directly from the truck (Full Automatic) or from the floor (Semi Automatic) and places them in the warehouse at a specified position provided by the Warehouse Management Software. The crane measures the weight and moisture content in the bales during lift and links the data to the supplier already registered in the SQL Database. The Warehouse Management System (WMS) also ensures that the Reception Conveyor is replenished.

Bale Conveyor System

BWE offers a complete automated Bale Conveyor System for baled fuel from reception in the warehouse to feeding the boiler. The first component in the automated train is the Reception Conveyor. The Reception Conveyor holds 12, 24 or 36 bales in waiting depending on plant size. A Transfer Conveyor receives two bales and delivers them one by one to the feeding line calling for fuel. A Weighing Conveyor measures the weight and moisture content of the individual bale, needed for the operation of the boiler. Next the bales enter the Air Lock Conveyor followed by two Buffer Conveyors. Then the String Cutter Conveyor cuts the twines followed by the Dosing Conveyor pushing the bales towards the Bale Opener loosening up the bales. From the Bale Opener fuel and twines drop down into the Double Screw Stoker..

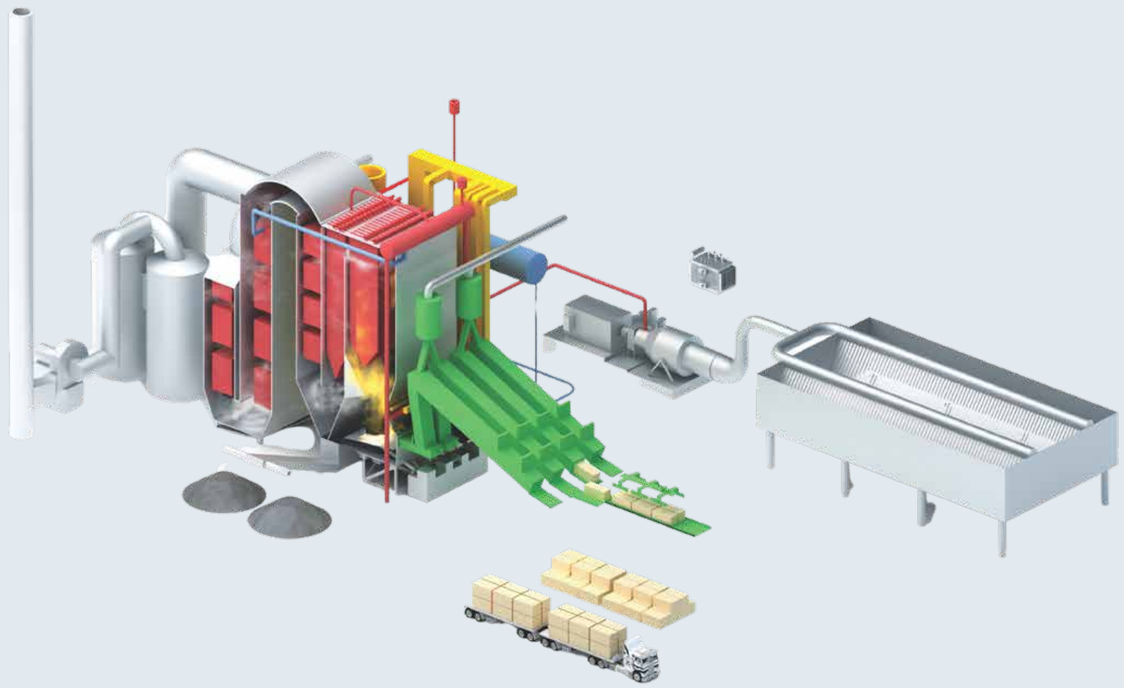

BWE
BURMEISTER & WAIN ENERGY
Berkes Group

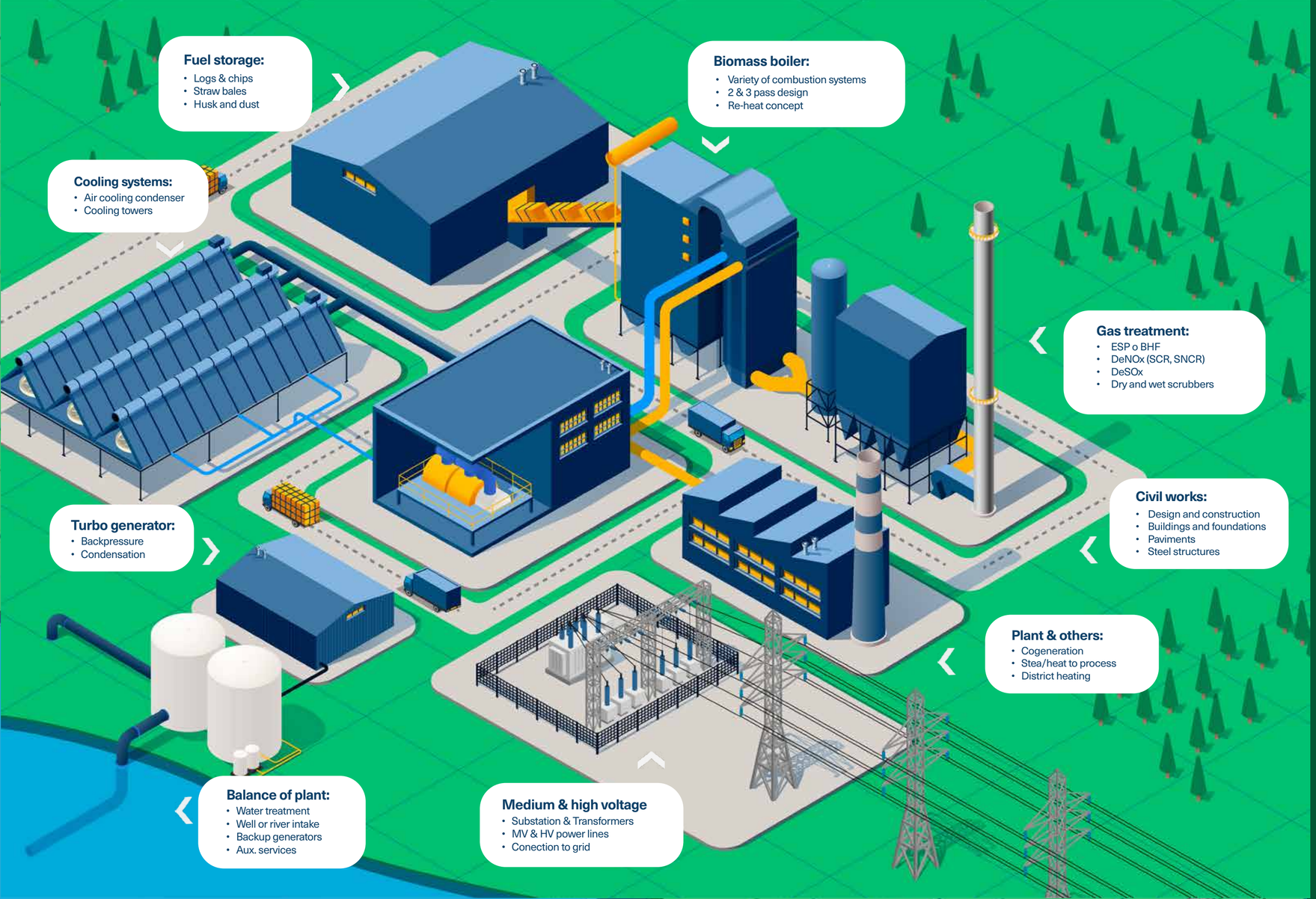

EPC/EPCM

BWE delivers projects under EPC and EPCM contracting models, adapting the execution strategy to the specific needs of each client and project.

Under an EPC (Engineering, Procurement and Construction) model, BWE assumes full responsibility for engineering, equiment supply, construction, and commissioning, delivering a complete turnkey plant with guaranteed performance, schedule, and cost.

Under an EPCM (Engineering, Procurement and Construction Management) model, BWE acts as the owner's engineering and project management partner, leading engineering, procurement coordination, and construction management, while the client retains direct contractual relationships with suppliers and contractors.

Both models benefit from BWE's integrated capabilities and experience, ensuring reliable, efficient, and sustainable biomass energy projects.

BWE
BURMEISTER & WAIN ENERGY
Berkes Group

BOILER CONCEPTS

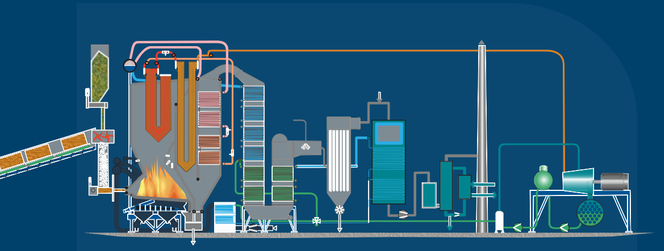

3 PASS BOILER SH & RH

Agricultural Biomass Residue High Alkaline
Base: Wheat Straw, Rice Straw, Corn Stover,
Mustard Husk, Palm Leaves, Sugarcane Top Trash ...
Supplement: Wood Chips, Wood Pellets ...

Fuel: 100% Base & 50% Supplement
Type: Three Pass Boiler Design
Water Cooled Vibration Grate
Double Screw Stoker
Combustion Air PreHeating
Submerged Bottom Ash Conveyor
Flue Gas Treatment with SCR or SNCR

Single Heat
Sizes: 60, 90, 120 & 150 MWt
Fuel Lines: 2, 3, 4 or 5
Steam: 110 bara, 540 °C
Slagging Pending Super Heater
Attemperators: 3

ReHeat
Sizes: 120 & 150 MWt
Fuel Lines: 4 or 5
Steam: 140 bara, 540 °C, 540 °C
Slagging Pending Super Heater
Slagging Pending Re Heater
Attemperators: 3+1

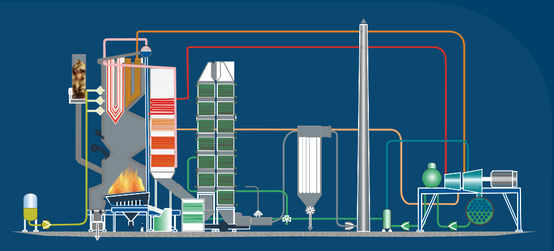

2 PASS BOILER SH & RH

Forest Biomass Residue Low Alkaline
Base: Wood Chips, Wood Pellets ...

Fuel: 100% Base
Type: Two Pass Boiler Design
Water Cooled Vibration Grate
Spreader Stoker
Combustion Air PreHeating
Primary Air PreHeating FW
Submerged Bottom Ash Conveyor
Flue Gas Treatment with SCR or SNCR

Single Heat
Sizes: 30, 45, 60, 75, 90, 105, 120, 135 & 150 MWt
Fuel Lines: 2, 3, 4, 5, 6, 7, 8, 9 & 10
Steam: 110 bara, 540 °C
Slagging Pending Super Heater
Attemperators: 3

ReHeat
Sizes: 75, 90, 105, 120, 135 & 150 MWt
Fuel Lines: 5, 6, 7, 8, 9 & 10
Slagging Pending Super Heater
Slagging Pending Re Heater
Attemperators: 3+1
Steam: 140 bara, 540 °C, 540 °C

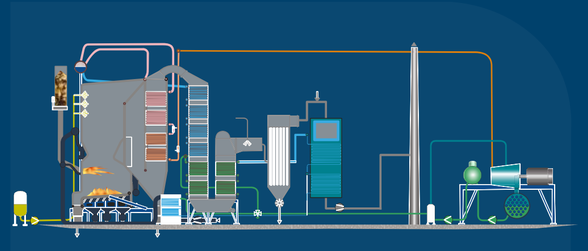

3 PASS BOILER SH

Waste A1/A2/A3/RDF/MSW Low Alkaline
Base: Waste Wood Chips, Refuse Derived Fuel,
Municipal Solid Waste.

Fuel: 100% Base
Type: Three Pass Boiler Design
Water Water Cooled Vibration Grate or Water Cooled
Step Grate
Furnace Inconel Lining
Spreader Stoker or Hydraulic Pushers
Combustion Air PreHeating
Primary Air PreHeating FW
Submerged Bottom Ash Conveyor
Flue Gas Treatment with SCR or SNCR
WI T2S Compliant

Single Heat
Sizes: 20, 30, 45, 60, 75, 90, 105, 120, 135 & 150 MWt
Fuel Lines: 2, 3, 4, 5, 6, 7, 8, 9 & 10
Steam: 110 bara, 470 °C
Attemperators: 2

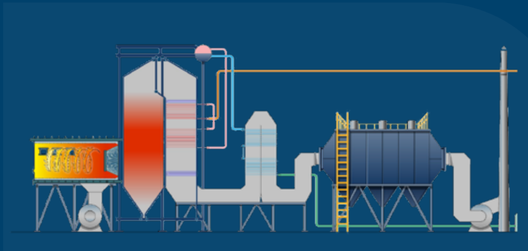

2 PASS BOILER CCC SH

Industrial Biomass Residue Low Alkaline
Base: Wood Dust, Sunflower Husk, Bone Meal ...

Fuel: 100% Base
Type: Two Pass Boiler Design
Cyclonic Combustion Chamber
Pneumatic Fuel Injection
Combustion Air PreHeating
Water Cooled Bottom Ash Conveyor
Flue Gas Treatment with SCR or SNCR

Single Heat
Sizes: 20, 40, 60 & 80 MWt
Fuel Lines: 1 & 2
Steam: 100 bara, 450 °C
Attemperators: 2

BWE
BURMEISTER & WAIN ENERGY
Berkes Group

MUNICIPALITIES & INDUSTRY

BWE offers on-demand Independent Combined Heat & Power (ICHP) boilers for municipalities and Behind The Meter (BHT) Combined Heat & Power (CHP) for industries which want to transition to an available and abundant renewable energy source while at the same time reducing operating cost and preserving the environment.

BWE supports municipalities and industries in their green transition and commitment to environmental conservation. Our solutions eliminates the carbon footprint and utilizes the full fuel energy by combining heat and power and by using Agricultural Biomass Residue like Wheat Straw, Rice Straw, Corn Stover, Mustard Husk, Palm Leaves and Sugarcane Top Trash or Industrial Biomass like Wood Dust, Sunflower Husk, Rice Husk, Spent Grain and many more.

BWE has extensive experience in carrying out Combined Heat & Power (CHP) concepts making it possible to generate electrical power and thermal heat in the same solution. The heat component can be provided as saturated steam or hot water.

BWE
BURMEISTER & WAIN ENERGY
Berkes Group

ENGINEERING

BWE has its own engineering team providing clients with customized solutions to utilize renewable biomass fuels for the generation of on-demand green, abundant and competitive energy.

Basic Engineering

BWE appreciates to participate in projects from their early development. This allows a smooth transition to from Conceptual Engineering to Basic Engineering and an early and accurate assessment of supply and assembly works for an accurate quote.

BWE engineering team develops concepts and basic engineering data, prepares plan view drawings, arrangements drawings, technical specifications and bill of quantities and other relevant documentation necessary for an early and accurate quote.

Detailed Engineering

BWE supports projects in all stages from Basic Eengineering to final Detailed Engineering & Design making the supply ready for purchase and assembly.

BWE follows the most stringent Safety and Design Standards. All requirements are considered in the design phase to achieve an end result that secures high quality, long life time and safe operation.

Boiler Revamping

BWE offers modification of existing boilers as revamping and fuel conversion:

- Modifying pressure part and converting combustion systems to biomass on existing boilers
- Conversion of industrial boilers to Combined Heat & Power
- Upgrade, supply and assembly of Flue Gas Treatment systems

BWE
BURMEISTER & WAIN ENERGY
Berkes Group

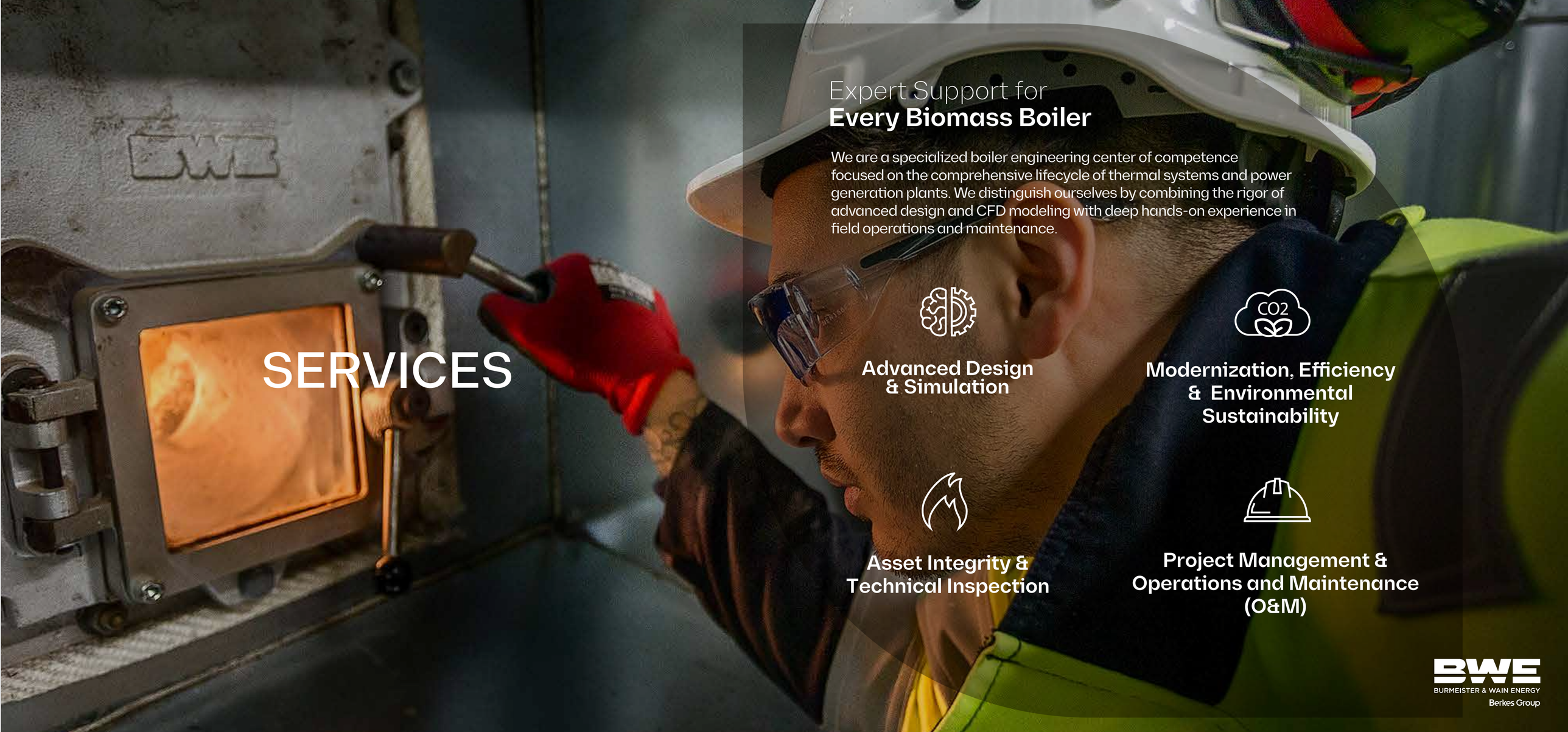

SERVICES

Expert Support for
Every Biomass Boiler

We are a specialized boiler engineering center of competence focused on the comprehensive lifecycle of thermal systems and power generation plants. We distinguish ourselves by combining the rigor of advanced design and CFD modeling with deep hands-on experience in field operations and maintenance.

Advanced Design & Simulation

Modernization, Efficiency & Environmental Sustainability

Asset Integrity & Technical Inspection

Project Management & Operations and Maintenance (O&M)

BWE
BURMEISTER & WAIN ENERGY
Berkes Group

BWE
BURMEISTER & WAIN ENERGY
Berkes Group

Allerød I DENMARK
Gydevang 35, Allerød, 3450

Madrid I SPAIN
Orense Street 11, level 2, Office I, 28020

Montevideo I URUGUAY
Cerrito 455, Ciudad Vieja, 11000

New Delhi I INDIA
Unit 204, Tower A, I-THUM Building, 201301

aftersales@bwe.dk I info@bwe.dk I comercial@bwe.dk

www.bwe.dk